FURNACE-TYPE LUMBER DRY KILN

Operation of an Experimental Unit

JUNE 1945

In cooperation with the
Office of Production Research and Development
of the **War Production Board**

No. R1474-A
(Supplement to Report No. R1474)

UNITED STATES DEPARTMENT OF AGRICULTURE
FOREST SERVICE
FOREST PRODUCTS LABORATORY
Madison, Wisconsin
In cooperation with the University of Wisconsin

Re-typeset edition: text transcribed from the 1945 typescript; figures redrawn as vector artwork. Content unchanged except as noted on the last page.

FURNACE-TYPE LUMBER DRY KILN*

OPERATION OF AN EXPERIMENTAL UNIT

By H. H. SMITH, Technologist

Operation of the furnace-type lumber dry kiln built at the Forest Products Laboratory is essentially the same as that of any conventional steam-heated kiln. Three factors govern the drying of lumber in this type, as in any dry kiln: the temperature, relative humidity, and circulation of the air in the kiln. In the furnace-type kiln, the temperature and relative humidity of the air are under good control and a constant uniform air circulation is provided. Either green or air-dried lumber can be dried in this kiln by following the standard kiln schedules in general use throughout the country. This kiln differs from the conventional steam-heated compartment kiln in the methods used to supply heat and maintain the relative humidity. The air-circulation system is a typical internal-fan, cross-circulation system.

The Heating System

Design

The heating system of the furnace-type kiln is a self-contained unit. Heat is supplied from a sawdust burner located in the control room. Sectional views of a typical two-piece feed grate and a typical multiple-shelf feed grate are shown in figure 1. The hot gases pass from the adjustable step grates and horizontal toe grates to the combustion chamber, where they are mixed with additional oxygen supplied by the secondary air and are more completely burned. From the combustion chamber, the hot flue gases pass through a return-bend flue pipe to the chimney.[1]

Operation

The method of maintaining the desired dry-bulb temperature in the furnace-type lumber dry kiln is distinctly different from that used in steam-heated kilns. When operating the latter type, steam is admitted to the radiating system within the kiln by valves manually or automatically operated to maintain the desired temperature. The heat is obtained by using the required amount of steam from a large supply. In operating the furnace-type kiln the total heat developed by the burner is used at all times and the desired temperature is maintained by controlling the rate of burning. The rate of burning in the sawdust burner used in the Laboratory experimental kiln is extremely flexible, and a high degree of control is obtained by manipulation of the adjustments for controlling the supply of air and fuel.

---

*This is one of a series of studies conducted at the Forest Products Laboratory in cooperation with the Office of Production Research and Development of the War Production Board.

[1]For a more detailed description of the heating system see Forest Products Laboratory Report No. R1474, “Furnace-type Lumber Dry Kiln.”

Starting the Fire.—Conventionally, the fire is started by tipping the hopper forward and laying paper and kindling on the grate before filling the hopper with fuel. A less laborious method is to fill the bottom of the hopper with dry shavings and light the fire from the ashpit below the inclined grates. The latter

method is particularly advantageous if the hopper has been extended upward into a fuel storage space so that it cannot be readily tipped forward for laying a fire on the grate.

Controlling the Temperature.—The desired kiln temperature is maintained by the automatic control of the air supply to the fire and the manual control of the fuel supply.

There are two adjustments for governing the amount of air admitted to the burner, the draft door in the front of the burner, and the secondary-air port on top of the burner toward the rear. In practice, part of the primary air entering through the draft door may bypass the fuel bed and thus become in effect secondary air.

Primary air is air that passes through the fuel bed and is controlled both by a thumbscrew adjustment of the draft door that maintains a minimum opening and by automatic opening and closing of the draft door. The temperature is controlled automatically by a thermostat that activates a damper motor through a three-wire, 25-volt electric circuit. As the temperature falls below the setting, the damper motor opens the draft door; when the desired temperature is reached, the motor closes the door. Thus a constant dry-bulb temperature is maintained.

The slope or position of the inclined grates also governs the amount of air that passes through the fuel bed. When the grates are tilted down less air passes through the fuel bed than when the grates are in a horizontal position. The volume of air that is thus directed is, of course, initially governed by the volume admitted through the draft door.

Secondary air furnishes the oxygen needed to continue the burning of the unburned gases in the combustion chamber. This air enters the burner through a secondary-air port, or through the draft door and passes under or around the grates into the chamber. The supply of air is controlled manually by adjusting the position of the cover of the secondary-air port as well as by the opening and closing of the draft door, as explained above. Apparently, the supply of secondary air is seldom more than is required for complete burning, and the secondary-air port may remain wide open during normal operation.

To hold a desired kiln temperature with the minimum variation, the thumbscrew on the draft door is manually adjusted to maintain a fire that will nearly furnish the heat required. The automatic opening of the draft door by the electric control motor is then adjusted by moving the point of attachment of the connecting chain along the control motor arm, or by leaving much or little slack in the connecting chain when the draft door is closed. The desirable adjustment is to have the rate of burning, when the draft door is opened by the control motor, safely above that required to maintain the desired temperature, but not enough to increase the temperature dangerously. Then, even though the mechanism fails, the temperature will not go far below or far above that desired.

Recorded temperature variations (table 1) during experimental kiln runs in the Laboratory kiln unit while operating under thermostatic control were not great, being about 2° F. (±1° F.). On occasion, temperature variations were considerably less, indicating that the burning rate of the furnace as governed by the draft is sufficiently flexible for accurate control. The sensitivity of the bimetal thermostat seems to be the limiting factor.

The adjustments for controlling the depth of the fuel bed on the grate are made by hand, usually only when there is a change in the type of fuel being used. Only a thin layer of a heavy fuel, such as green hardwood sawdust, is required for satisfactory burning, while a thick layer of a light, dry fuel, such as shavings from a flooring mill, is required. The fuel baffle is suspended from two threaded studs that extend upward through the top casting of the burner. By turning the nuts on these studs, the baffle is raised or lowered. The angle of the inclined grates also governs the depth of fuel as well as the amount of air that passes through the fuel bed. As the grates are tilted downward, the depth of the fuel bed becomes greater, and as they are tilted back to a horizontal position, the depth of the fuel bed becomes less.

In general, a bed of fuel that is too thick causes much smoke and incomplete burning of the gases in the combustion chamber, while a bed that is too thin allows the draft to rush through the burner, carrying sparks and ash into the combustion chamber. Probably the ideal adjustment is to have the fuel bed as thick as possible while maintaining satisfactory combustion as indicated by the absence of smoke.

Removal of Ash.—Limited experience indicates that the burner can be operated continuously during a kiln run as long as 3 weeks if the ash pit is cleaned out daily or every other day. The amount of ash that accumulates during a 24-hour period is less than 0.5 bushel while burning approximately 700 pounds of green hardwood sawdust. Between runs, the secondary combustion chamber and the burner are cleaned thoroughly. Approximately 0.4 bushel of ash accumulates back of the grates and in the combustion chamber during 1 week of operation. The removal of this ash presents no special problem.

Fuel

The general design of the furnace-type lumber dry kiln lends itself to the use of a wide range of fuels. A furnace burning coal, oil, gas, or wood can be readily adapted to this application. The principal consideration in the selection of a burner or furnace is the ultimate cost of drying the lumber. This cost will be affected by such factors as the initial cost of the furnace, the annual depreciation, the cost of the fuel, and the time required for operation.

The use of a sawdust burner to heat a lumber dry kiln offers desirable economy where feasible because of the abundant supply of cheap fuel available at most sawmills. One year’s operation of the experimental Laboratory unit indicates that the commercial sawdust burner can be operated at low fuel costs where green sawdust is available, but under other conditions coal, oil, or gas may be more satisfactory.

Kinds of Wood Waste Used.—Sawdust, shavings, and chips were burned in the Laboratory unit with varying degrees of success. The size, shape, and moisture content of the fuel determine its acceptability. Both have a direct bearing on the heat value of a given volume of fuel and on the manner in which the fuel will feed down from the hopper into the burner. Granular sawdust feeds much better than either shavings or chips, which, because of their shape and light weight, tend to clog the hopper. Wet fuel has less available heat because of the amount needed to evaporate the water before it can burn. Being somewhat heavier per unit volume, it feeds better from the hopper than shavings or chips.

During the experimental kiln runs there was no difficulty in holding a fire. When burning light dry shavings or chips that do not feed well, the fire burned back into the hopper. Green hardwood or softwood sawdust fed well, burned well, and contained a relatively high heat value per unit of volume. A mixture

of sawdust and shavings or chips burned less satisfactorily as the proportion of shavings was increased. A mixture of 50 percent green sawdust by volume (moisture content 60 to 100 percent based on the oven-dry weight) and 50 percent dry shavings (moisture content 10 to 15 percent) burned fairly well. Hardwood sawdust having a moisture content of about 40 to 60 percent burned best of the several types of fuel used.

Quantity of Sawdust Needed.—The limited data available on fuel consumption permit only a rough estimate of the quantity required for continuous operation. During 12 kiln runs in the Laboratory experimental unit, 68,150 board feet of lumber were dried. Records of the weight and moisture content of fuel burned and the pounds of water evaporated from the lumber being dried showed that the kiln operates at an overall efficiency of between 15 and 30 percent. This efficiency figure was obtained by dividing the number of British thermal units required to evaporate the water from the lumber dried by the number of British thermal units in the fuel burned. A wide range of material was dried, including 3/4 and 4/4 Western redcedar, 4/4 ponderosa pine, Eastern white pine, Douglas-fir, commercial red and white oak, and hard maple. The highest efficiency figures were recorded when drying fast-drying species that had a high original moisture content. The drying time for these species ranged from 3 to 10 days. Small sawmills in one part of the South produced from 0.80 to 0.89 pound of sawdust (oven-dry weight) per board foot sawed,[2] or enough fuel to kiln dry upward to 75 percent of all the lumber manufactured.

---

[2]"Wood Waste Available for Conservation to Ethyl Alcohol in the Columbia Area of South Carolina," by Thomas Lotte, Forest Survey Release No. 17, Forest Service, U. S. Department of Agriculture.

Relative Humidity System

The furnace-type lumber dry kiln is designed for operation as an independent drying unit without the use of steam, either for heat or humidification. Since steam for sprays is not available for maintaining the desired relative humidity as is done in the conventional steam heated kiln, other means have been provided.

Design

In steam-heated kilns the humidity is controlled by maintaining the dry-bulb and wet-bulb temperature that will give the desired relative humidity. The dry-bulb temperature is maintained through control of the steam supply to the heating coils, and the wet-bulb temperature is maintained through control of the steam spray and the vents.

In the Laboratory's furnace-type kiln, the desired relative humidity is maintained by automatic control of the vents and a water spray by means of a wood-element hygrostat developed at the Forest Products Laboratory (fig. 2). This instrument is capable of maintaining the desired relative humidity independently of the dry-bulb temperature. Such a hygrostat is fairly easy to construct and details concerning it can be obtained from the Forest Products Laboratory. It is capable of controlling the relative humidity conditions in this kiln within an equilibrium moisture content of wood of approximately 1 percent, but adjusting it to maintain any particular condition requires considerable time.

Operation

There are two methods of maintaining the desired relative humidity: (1) by utilizing the moisture from the wood being dried, as is generally done in a commercial kiln operation, and (2) by the use of water sprays to increase the relative humidity of the air. The water sprays are used as are steam sprays in a commercial kiln operation.

The moisture given up from the lumber being dried is utilized by making the kiln as vapor-tight as possible. During the first part of a kiln run, a high relative humidity is necessary to prevent excessive shrinkage and tension of the surface fibers. If the moisture given up by the wood is more than sufficient to maintain the desired relative humidity, some is exhausted through the vents. As the drying progresses, less and less moisture is extracted from the wood, but a lower relative humidity is desired. This fortunate circumstance makes the control of relative humidity comparatively easy. Especially is this true when drying thin sizes of species that dry readily.

When a higher relative humidity is desired than can be attained by closing the vents to utilize the moisture from the wood, vapor is added to the air by spraying a fine mist of water upon the hot flue pipes from a spray nozzle. A city water supply maintained at a 60-pound pressure gives a fairly fine spray, but pressures perhaps as high as 150 pounds per square inch are desirable. When city water is not available, water can be supplied from a well or driven point by means of a high-pressure piston or rotary pump of small capacity.

Both the vents and the water spray can be operated automatically by an electric control motor through a three-wire, 25-volt circuit and the wood-element hygrostat. During the first part of the kiln run, when there is more than sufficient moisture in the air, the hygrostat circuit is switched to the control motor that operates the vents. In this manner the relative humidity is kept down to that desired by venting the excess. When the moisture given up by the lumber being dried no longer maintains the desired relative humidity, the hygrostat circuit is switched to the control motor that opens the water valve or activates the high-pressure pump, and water is sprayed onto the hot flue pipe, thus increasing the relative humidity to that desired.

Several kiln runs were dried in the Laboratory unit without automatic relative humidity control, and with satisfactory results. This moisture-tight kiln is not subject to sudden changes of relative humidity as drying progresses. The relative humidity remains steady, slowly falling as less moisture is given up from the wood.

Figure 3 shows the kiln conditions and the drying rate of the lumber for a kiln run consisting of 4/4 commercial red and white oak. During the first 6 days, the wood-element hygrostat held the relative humidity to a maximum of 80 percent (except for the first day while the control was being established). Thereafter the vents remained closed and the relative humidity gradually dropped to 10 or 12 percent during the final days of drying. After the lumber had dried to a moisture content of 5 percent, a conditioning treatment was given the oak by increasing the temperature to 165° F. and the relative humidity to 65 percent for 6 hours by means of the water sprays. As the temperature dropped during the night, the relative humidity increased to 90 percent. This conditioning treatment completely relieved the casehardening stresses.

In another kiln run, consisting of 4/4 hard maple, the fire was maintained during daylight hours only, and consequently the drying conditions, especially the temperature, varied considerably from the control setting. This is shown in figure 4, which gives the complete drying data for this particular run.

Regulating and Indicating Instruments

Besides the bimetal thermostat for regulating the temperature and the wood-element hygrostat for controlling the relative humidity already described, inexpensive wall hygrometers are used to determine the conditions of temperature and relative humidity. One is placed on each side of the kiln visible through glass-block inspection port above the rear access doors. By reading the dry- and wet-bulb thermometers of each instrument, the kiln operator is able to determine the temperature and relative humidity within the kiln, and thus regulate the drying conditions according to the moisture content of the kiln samples as prescribed by the kiln schedule being followed.

Circulation System

Design

The Laboratory kiln is an end-piled, cross-circulation kiln in which the fans are located overhead to draw the air up around the heating pipes, over the top of the load to the opposite side of the kiln, down past the control instruments, and thus through the load and back to the heating pipes. They can also be reversed, but a study of temperatures throughout the kiln showed less uniformity in the reverse direction.

Operation

In operating the kiln, the fans are run continuously even though the temperature should go down when the fire is temporarily out or burning low. With continuous air circulation and only intermittent firing of the burner, the lumber dried at a satisfactory rate.

Preparation and Use of Kiln Samples

Kiln schedules based on the average moisture content of the lumber were used in operating this experimental kiln unit.

The selection, preparation, and use of kiln samples was as follows:

1. Boards from which the kiln samples were to be cut were selected as the lumber was being piled. These boards represented the thicker stock that contained a comparatively high percentage of heartwood and moisture content.
2. Two-foot kiln samples were cut from these representative boards. A board was first trimmed back to remove the effect of end drying, and 1-inch moisture sections were cut from wood adjacent to each end of the kiln sample and oven dried to constant weight to determine the moisture content of that kiln sample. The moisture content in percent of these sections was calculated by the formula:

$$\text{Moisture content} = \frac{\text{green weight} - \text{oven-dry weight}}{\text{oven-dry weight}} \times 100$$

3. The kiln samples were immediately end coated with filled hardened gloss oil to prevent excessive end drying and then weighed. The oven-dry weights of these kiln samples were calculated by the formula:

$$\text{Oven-dry weight} = \frac{\text{green weight}}{100 + \text{moisture content}} \times 100$$

4. During the operation of the kiln, the samples were dried along with the lumber by placing them in the load in places provided during the piling and were removed periodically (usually daily) for weighing. The current moisture content in percent was determined by the formula:

$$\text{Current moisture content} = \frac{\text{current weight} - \text{calculated oven-dry weight}}{\text{calculated oven-dry weight}} \times 100$$

   The changes in kiln conditions were made on the basis of these figures.

5. When the calculated moisture content of the kiln samples indicated that the lumber was dry, moisture content tests were made. For this purpose a 1-inch section was cut from each kiln sample approximately 6 inches from one end. The remaining portion of each kiln sample was again placed in the kiln. These sections were used to make average moisture content tests by weighing and oven drying them as a whole and applying the formula given in step 2. These moisture content values are more accurate than the values calculated from periodic weights of the kiln samples, and are a check of the latter. If this test also indicated the lumber was dry, the stresses in the lumber were relieved by a high temperature and high relative humidity conditioning treatment. (For precision drying, freshly cut ends of samples should be end-coated.)

6. Before the lumber was removed from the kiln, final moisture content and stress tests were made. Two 1-inch sections were cut from the remaining portion of the kiln sample. One was cut so that its center and shell could be weighed separately in order to determine the moisture distribution in the section. The formula of step 2 was also used to determine moisture content. The second section was slotted to determine the stress. Only after the results of these tests showed the lumber to be dried to the desired moisture content and to be free of stress was the lumber removed from the kiln.

Cost of Operation

The Laboratory experimental kiln unit cost $3,000, of which $800 was for equipment. Complete cost figures, including depreciation, maintenance, interest, insurance, and other factors of interest to commercial operators, are not available. Operating cost figures of interest to anyone contemplating the building and operation of the furnace-type lumber dry kiln can, however, be calculated fairly closely.

The Laboratory kiln has two 1-1/2-horsepower fans that use about 2 kilowatts per hour. At $0.02 per kilowatt hour, cost of power is $1 per day.

The burner uses green oak sawdust at the rate of 70 to 80 pounds per hour at the start of a kiln run when the kiln and the lumber are being heated, and at only a slightly lower rate during the early stages of drying, when considerable moisture is evaporated from the wood. Especially is this true when drying a fast-drying species. As drying continues and an even temperature is being maintained, the burning rate drops rather sharply to 20 to 30 pounds of green oak sawdust per hour. The overall average burning rate is approximately 40 pounds per hour. If the cost of sawdust is $1 per ton, the cost of fuel will be approximately $0.50 per day.

The kiln requires 1 to 1-1/2 man-hours per day for maintaining the fire and weighing kiln samples. While common labor can be used for filling the hopper (which has to be done once or twice daily) the kiln operator should be a skilled technician. These costs will vary considerably, but might be $0.60 for the laborer (1 hour) and $0.60 for the operator (1/2 hour), or $1.20 per day. The following summary shows estimated daily operating costs:

Item	Cost per day
Electric power	$1.00
Fuel	.50
Operator’s time	.60
Operator’s help	.60
Total	**$2.70**

Cost per day per thousand board feet dried would then be $2.70 divided by the average kiln charge, 6,000 board feet, or $0.45.

These figures are based on only a short period of operation of an experimental unit, and operating costs of a commercial unit may be less.

Special Problems

Several problems connected with the operation of the furnace-type kiln differ from those encountered in the operation of a conventional kiln.

Fire Hazard

First among the special problems to be solved is that of eliminating or greatly reducing the fire hazard. Many of the early smoke kilns and hot-air kilns eventually burned down. Steam-heated kilns are safely separated from the boiler room, but the furnace-type kiln is a close-coupled unit, with the fire box an integral part of the kiln. The fire is near the inflammable fuel storage bin and the lumber in the kiln. The source of fire may be (1) the burner in the control room or (2) the heating pipe within the kiln.

The sawdust burner used in heating the Laboratory kiln is of a design widely used in the Pacific Northwest for heating homes and larger buildings with wood fuel. Provided that adequate care is given to the problem of preventing fire when used to heat a lumber dry kiln, successful results should be obtained.

A fire from the burner may originate at the draft door from which sparks sometimes fly when the burner puffs and backfires due to incomplete burning in the combustion chamber. The danger is increased if the ash-pit door is left opened and unscreened. The backfiring may occur when the combustion chamber is not sufficiently hot, as after a long period with the dampers closed or when the fire is being started. The former is common if the burner is too large for the heat requirements and must be operated at a low burning rate. There seems to be no backfiring if the burner is operating at a brisk rate of burning. A shield around the front of the burner or a fireproof furnace room would eliminate this fire hazard.

Fires may also originate in the hopper if the fuel does not feed down readily, thus allowing the flames to extend into the hopper. When the fuel supply in the hopper runs low, moreover, sparks may rise from the grates into the hopper. The proper precaution in either case is to use green or only partially dry sawdust and to keep the hopper well-filled and covered with a metal lid at all times, except when loading.

The metal heating pipe inside the kiln is also a potential source of fire, since it becomes hot during operation. The section adjacent to the combustion chamber becomes sufficiently hot to ignite any wood that might come in contact with it. The area about the heating pipe must, therefore, be kept clean and free of all wood waste. To further overcome this objection a long tunnel-shaped combustion chamber is being tried as a means of dissipating some of the heat, before the hot gases enter the first section of pipe.

Loading and Unloading

To use the kiln to best advantage, it should be in operation as much of the time as possible. This is difficult if the lumber is loaded directly into the kiln, for the kiln will be down the length of time required to unload and reload. The use of kiln trucks will shorten the time somewhat, for one charge can be loaded ready for the kiln while the kiln is operating, and the time between runs will be only the time required to remove the dry lumber and push the trucks of green lumber into the kiln.

A transfer car system might be too great an expense for a small kiln operation. Under some circumstances, the loading and unloading could be facilitated by building a kiln with a door at each end, so that the operation will be progressive from the loading tracks to and through the kiln, and out its unloading end to the unloading tracks.

Conclusions

Judgment concerning the performance of the Laboratory furnace-type lumber dry kiln is based on the drying of 14 kiln loads of lumber, including both softwoods and hardwoods, during a year of intermittent operation.

These experimental kiln runs showed that the temperature can be accurately controlled by automatic operation of the draft door of the sawdust burner with a bimetal thermostat and that the temperatures called for in the Laboratory's kiln-drying schedules can be maintained, except where insufficient heat is furnished by the burner to reach high initial temperatures (such as the 160° F. to 180° F. used in drying some softwoods). The degree of relative humidity control attained by either automatic control of the vents with the wood-element hygrostat or by manual control is conducive to good drying of even such refractory woods as oak.

The rate and quality of drying were satisfactory. Further, the use of water sprays to furnish a high relative humidity for final relief of casehardening stresses was very effective.

Experience with this experimental unit does not furnish data that can be used to judge the cost of drying that could be expected in a commercial operation. The features that are peculiar to this kiln, such as the use of cheap sawdust to furnish direct heat to the kiln, the use of water sprays to furnish the required relative humidity, and the control of both temperature and relative humidity by the use of simple instruments, are conducive to inexpensive drying. Such items as the cost of the building, the loading and unloading of the lumber, the electric power for the fans, and the kiln operator's time are comparable to the expense to be expected in a steam kiln of similar capacity.

Since many of the direct heated kilns used in the past failed because they eventually burned, the seriousness of the fire hazard should be understood and the necessary steps should be taken to eliminate this hazard during both construction and operation of the kiln.

Table 1.—Samples of thermocouple temperature readings showing temperature variations throughout the kiln at different control temperatures

Position of thermocouple in kiln load		Entering air	Leaving air	Temperature drop across load	Deviation from control temperature
		°F.	°F.	°F.	°F.
Control temperature 100° F.					
Top	Front	102	102	0	2
Bottom	Front	103	103	0	3
Top	Center	104	—	—	4
Bottom	Center	99	—	—	1
Top	Rear	103	103	0	3
Bottom	Rear	102	102	0	2
Control temperature 115° F.					
Top	Front	116	116	0	1
Bottom	Front	116	114	−2	1
Top	Center	116	114	−2	1
Bottom	Center	116	114	−2	1
Top	Rear	114	114	0	1
Bottom	Rear	115	115	0	0
Control temperature 140° F.					
Top	Front	140	136	4	4
Bottom	Front	141	138	3	2
Top	Center	141	—	—	—
Bottom	Center	—	—	—	—
Top	Rear	139	139	0	1
Bottom	Rear	138	139	[1]+1	2
Control temperature 160° F.					
Top	Front	160	162	[1]+2	2
Bottom	Front	162	160	2	2
Top	Center	162	160	2	2
Bottom	Center	160	160	0	0
Top	Rear	160	160	0	0
Bottom	Rear	160	162	[1]+2	2

[1]Those temperature readings on the leaving side of the load that are higher than the corresponding entering air temperature readings apparently are due to direct radiation from the heating pipe.

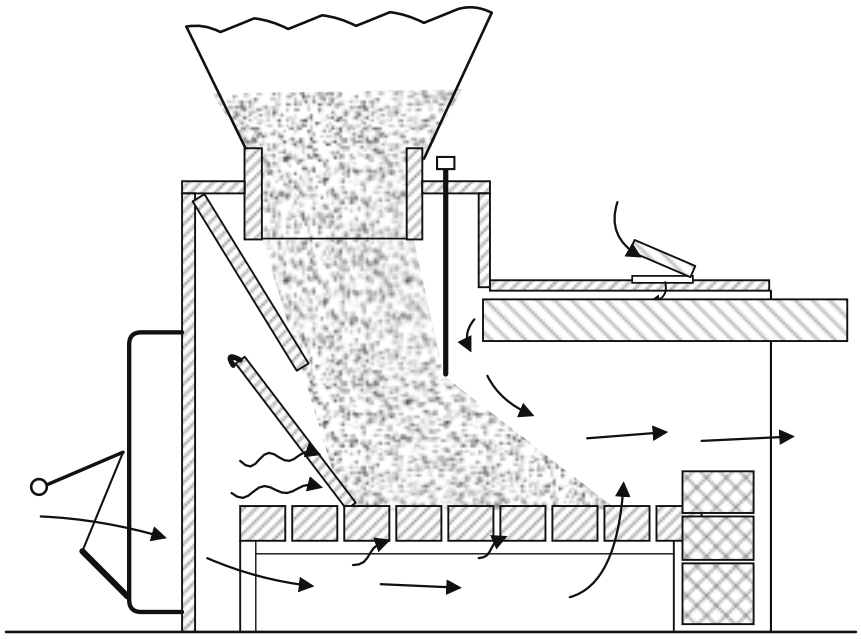

SECTION SHOWING TYPICAL TWO-PIECE FEED GRATE

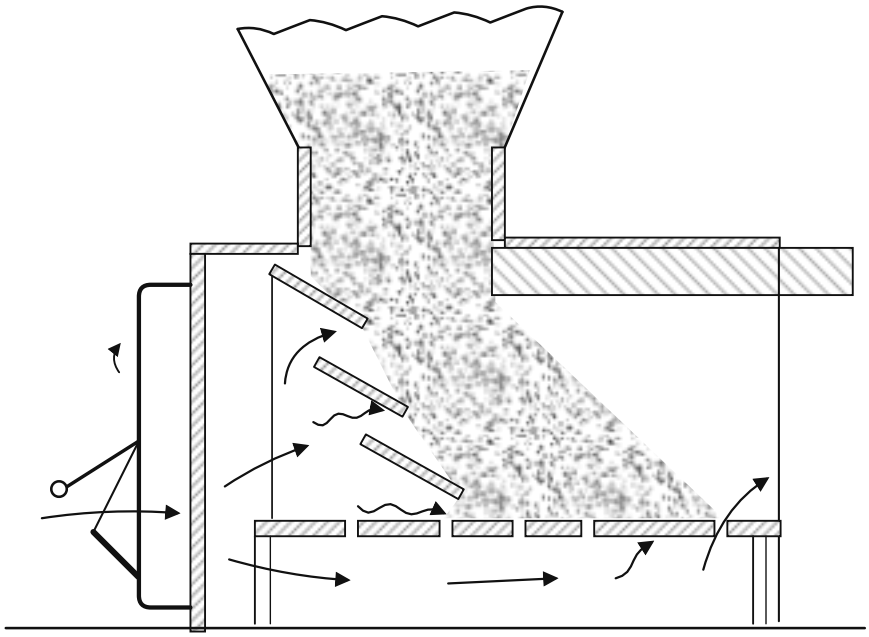

SECTION SHOWING TYPICAL MULTIPLE-SHELF FEED GRATES

Figure 1.—Cross section views of two typical sawdust burners that are adaptable for use in heating a furnace-type lumber dry kiln.

Z M 61545 F

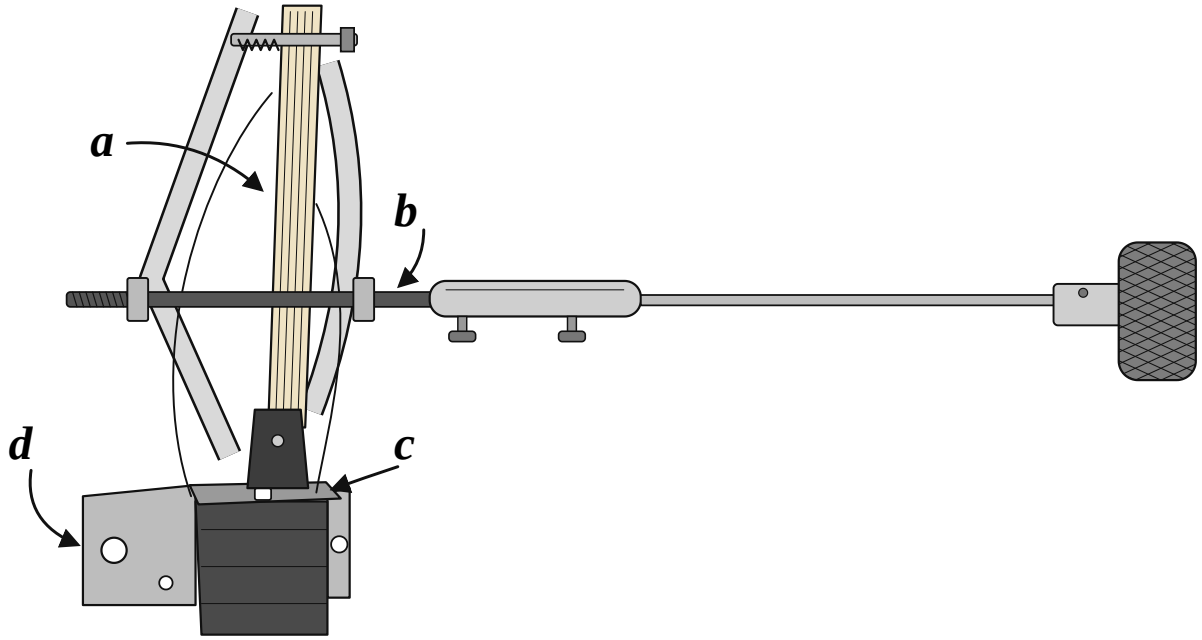

Figure 2.—Wood-element hygrostat. Wood element, *a*, of basswood; arrow points to end grain. Adjusting screw, *b*, with right and left threads and extension rod to control setting from outside of kiln. Double-throw electric switch, *c*, that is sensitive to an extremely small movement of the wood element. Frame, *d*, for mounting instrument away from the wall to insure adequate air movement around wood element. Shrinking or swelling of the wood element with changes of relative humidity within the kiln activate the electric switch. The switch controls either the vents or the water sprays, depending upon the need for raising or lowering the relative humidity.

Z M 63025 F · Line drawing redrawn from the original photograph.

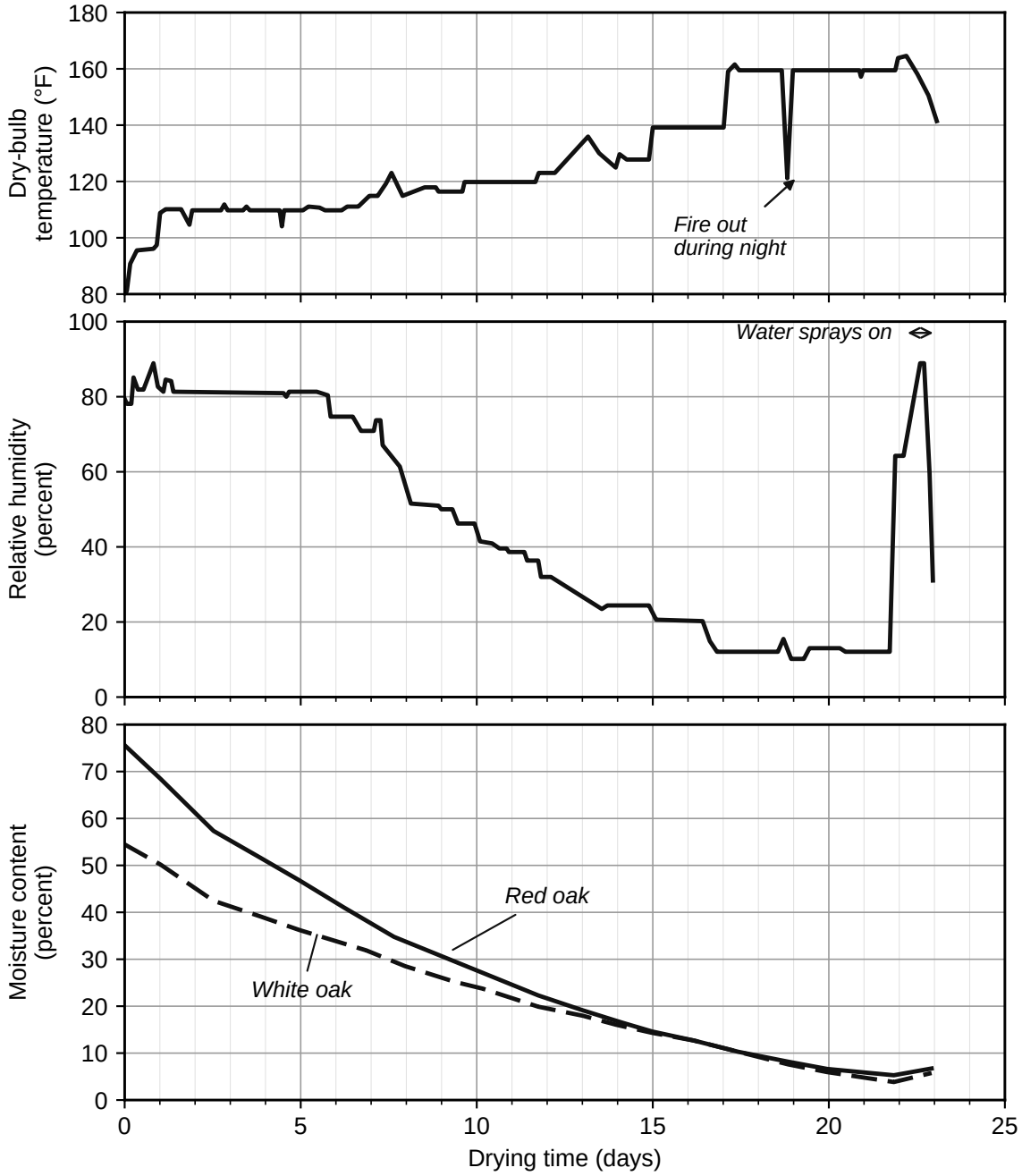

Figure 3.—Drying conditions in furnace-type lumber dry kiln and resulting drying rate of commercial white and red oak.

Z M 63026 F

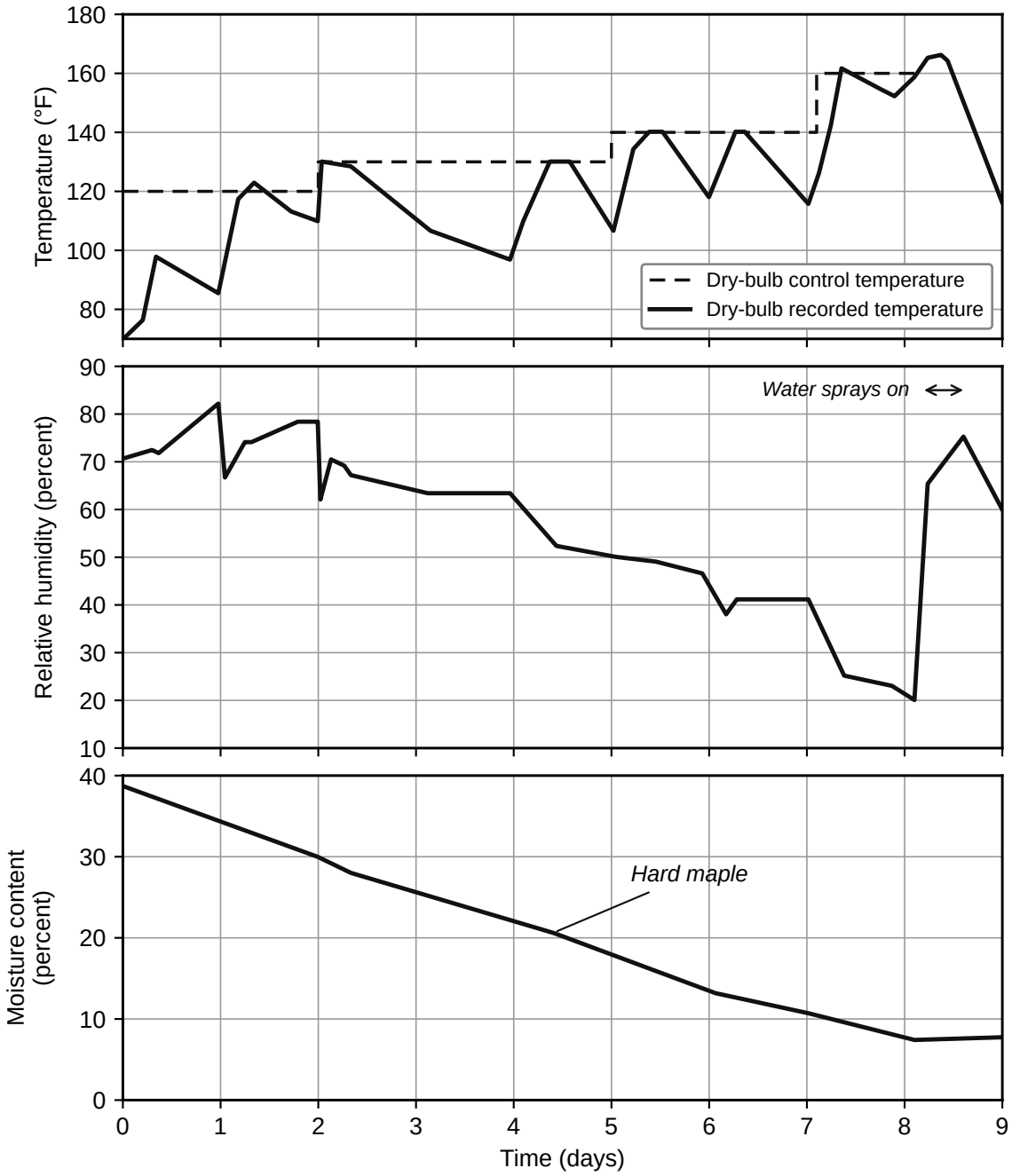

Figure 4.—Drying conditions in furnace-type lumber dry kiln and resulting drying rate of commercial hard maple.

Z M 63027 F

Notes on this edition. The text was transcribed from the scanned 1945 typescript of Forest Products Laboratory Report No. R1474-A. Obvious typing errors were corrected ("dired" → dried, "airport" → air port, and the report number misprinted as R1747-A on one page). The signs in the "temperature drop" column of Table 1 are reproduced as printed.

Figures 1 and 2 were redrawn as vector line art; Figure 2 is an interpretive line drawing of the original photograph. The curves in Figures 3 and 4 were digitized from the original charts and re-plotted, so individual points are accurate to roughly ±1 unit of the plotted scale.